GEBR. PFEIFFER

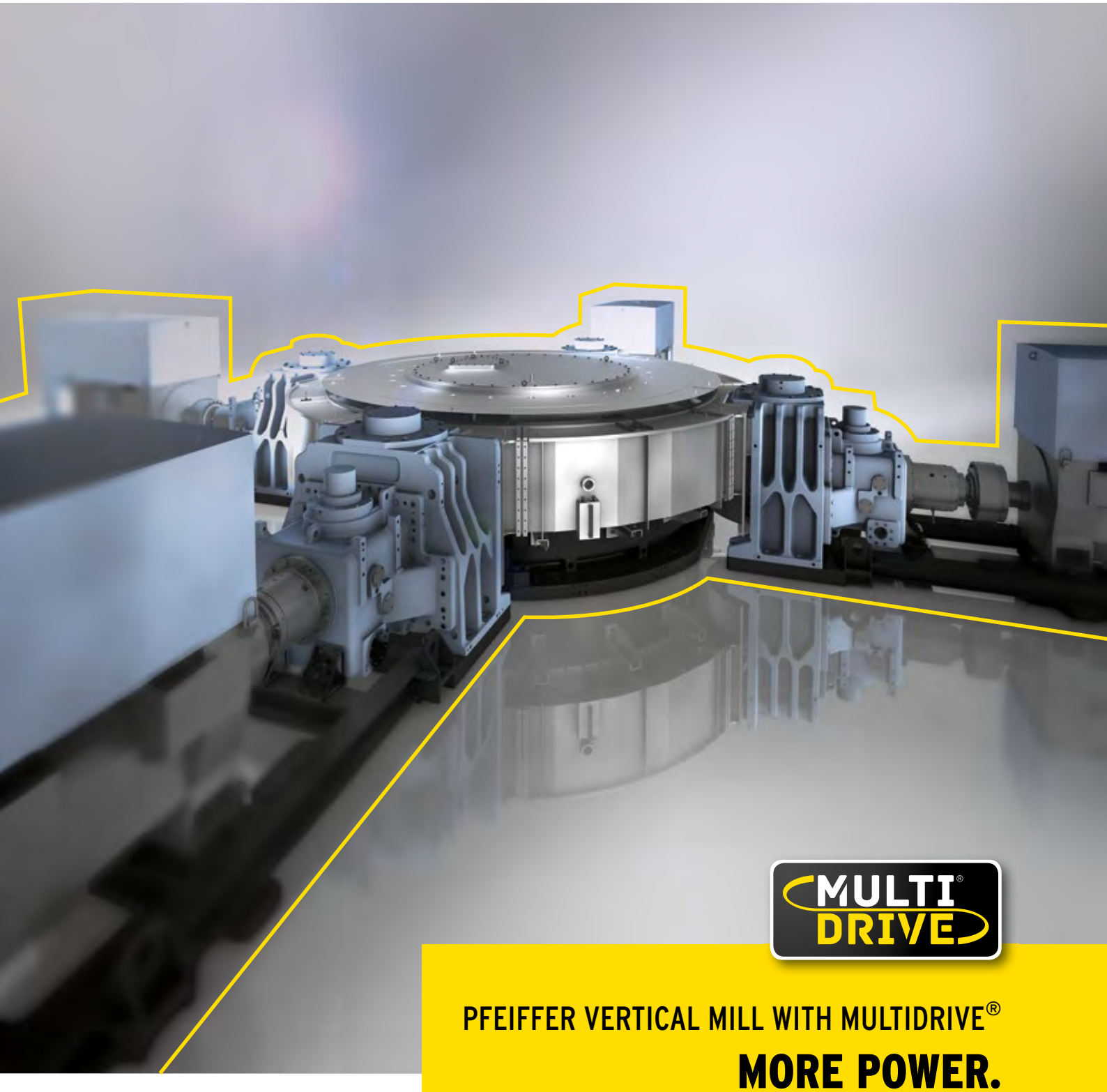

MULTI DRIVE®

PFEIFFER VERTICAL MILL WITH MULTIDRIVE®

MORE POWER.
ULTIMATE AVAILABILITY.

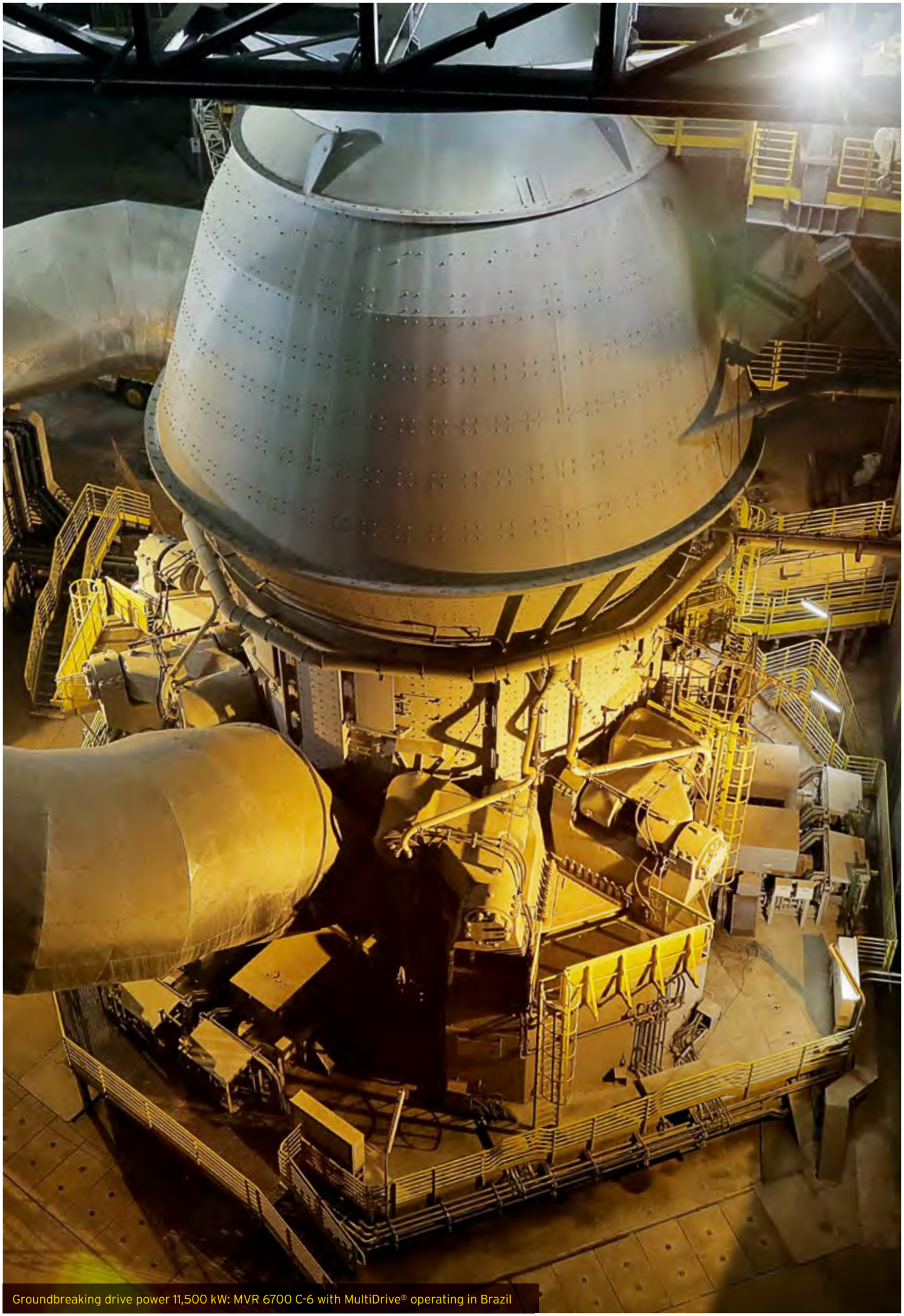

Groundbreaking drive power 11,500 kW: MVR 6700 C-6 with MultiDrive® operating in Brazil

GEBR. PFEIFFER

Passion for grinding

// Tradition since 1864

As a family-run business with its head office in Kaiserslautern, Germany, Gebr. Pfeiffer has pioneered the development of modern grinding, separating, drying, slaking, and calcining technologies for more than 150 years. Today, some 500 qualified employees are all united in the endeavor to carry on the passion of our founder Jacob Pfeiffer. Our motto: long-term development rather than short-lived success. The result: ever new impulses ensuring our top ranking among the leaders in the industry.

// Quality made in Germany

One cornerstone of our success is our experienced staff, who develop every aspect of our products, and another is the high degree of vertical integration at our headquarters in Kaiserslautern – German engineering to the finest detail. Committed to providing the highest quality standards for our products and services, we are oriented entirely on our customers' individual requirements. Reliability and efficiency without any unplanned downtime: this is what Gebr. Pfeiffer stands for.

// The world grinds with Pfeiffer

Customers all over the world rely upon Pfeiffer's innovative system solutions ensuring efficient production of cement, lime, gypsum, coal, raw material, clay and many other materials. Our clients profit from our global network of subsidiaries in India, Egypt, China, Brazil, Malaysia, Russia and the United States along with an extensive network of cooperations, representations, and a selection of highly experienced service partners. So we are on the spot – worldwide.

Maximum throughput – 100% reliability Pfeiffer MVR mills with MultiDrive®

// When grinding raw material, cement and granulated blast-furnace slag, what's the point? Maximum throughput and utmost technical availability! This is ensured by the Pfeiffer MVR vertical mill with its revolutionary MultiDrive®. With a drive power of up to 18,000 kW, throughput rates of more than 1,400 t/h can be reached on a single mill. An additional important feature of this system is the double active redundancy ensuring highest availability and productivity without downtime. In fact, if a roller module or a drive unit is out of service, mill operation continues at the same or just slightly reduced throughput rate. This is unique and available at Gebr. Pfeiffer only.

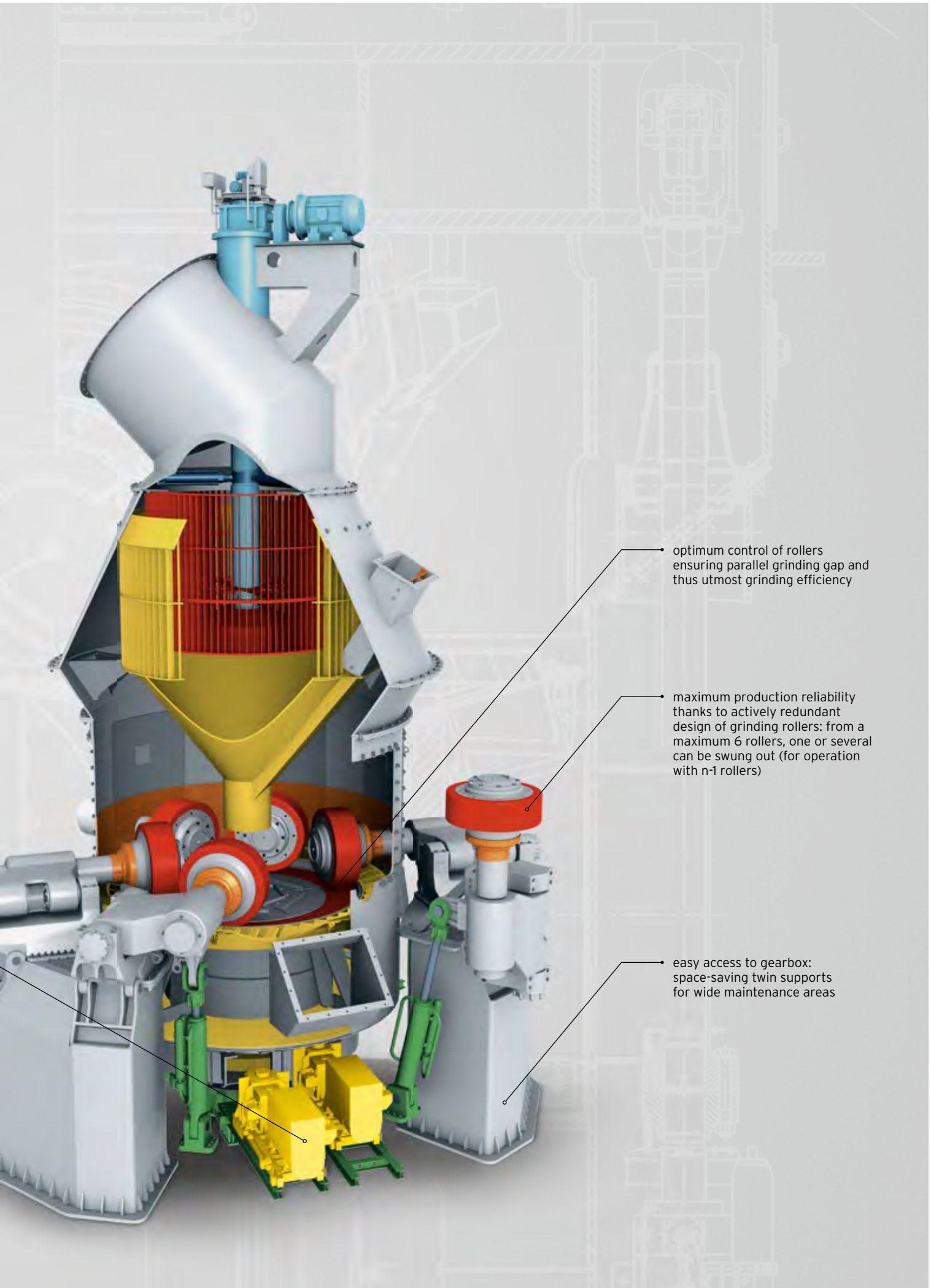
optimum control of rollers ensuring parallel grinding gap and thus utmost grinding efficiency
maximum production reliability thanks to actively redundant design of grinding rollers: from a maximum 6 rollers, one or several can be swung out (for operation with n-1 rollers)
easy access to gearbox: space-saving twin supports for wide maintenance areas

MultiDrive®: safeguard against total failure

// The MultiDrive® is the only drive available on the market which is actively redundant both electrically, hence as far as the motor is concerned, and mechanically, i.e. on coupling and gearbox. Moreover, with its revolutionary design, none of the gearbox components are located under the mill where they would be exposed to the grinding forces. What does that mean for the user? A failure is hardly possible. And even if a complete drive unit is out of service, the mill continues operating, sometimes even without a reduction of throughput. In fact, there can't be any better safeguard against failure!

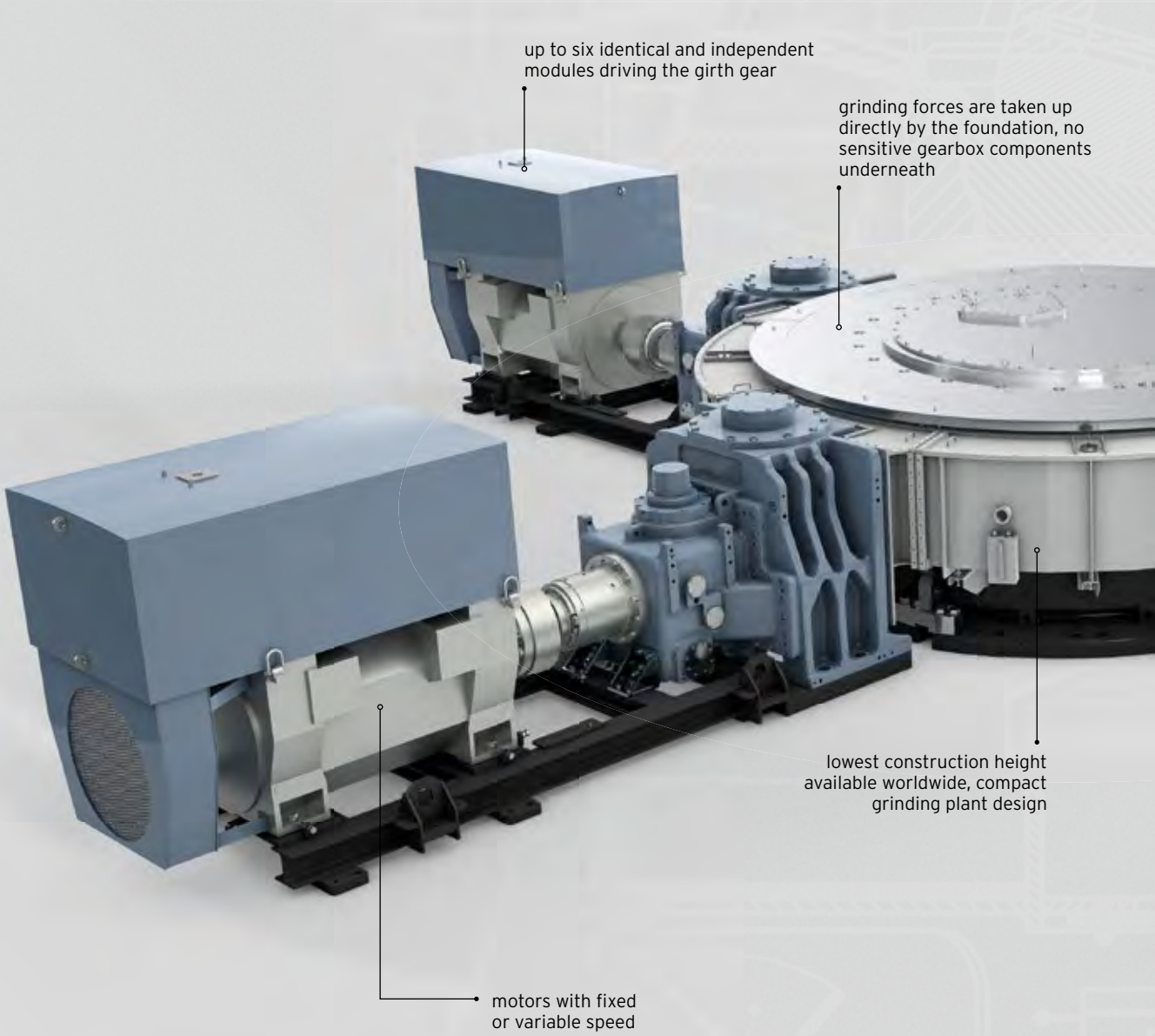

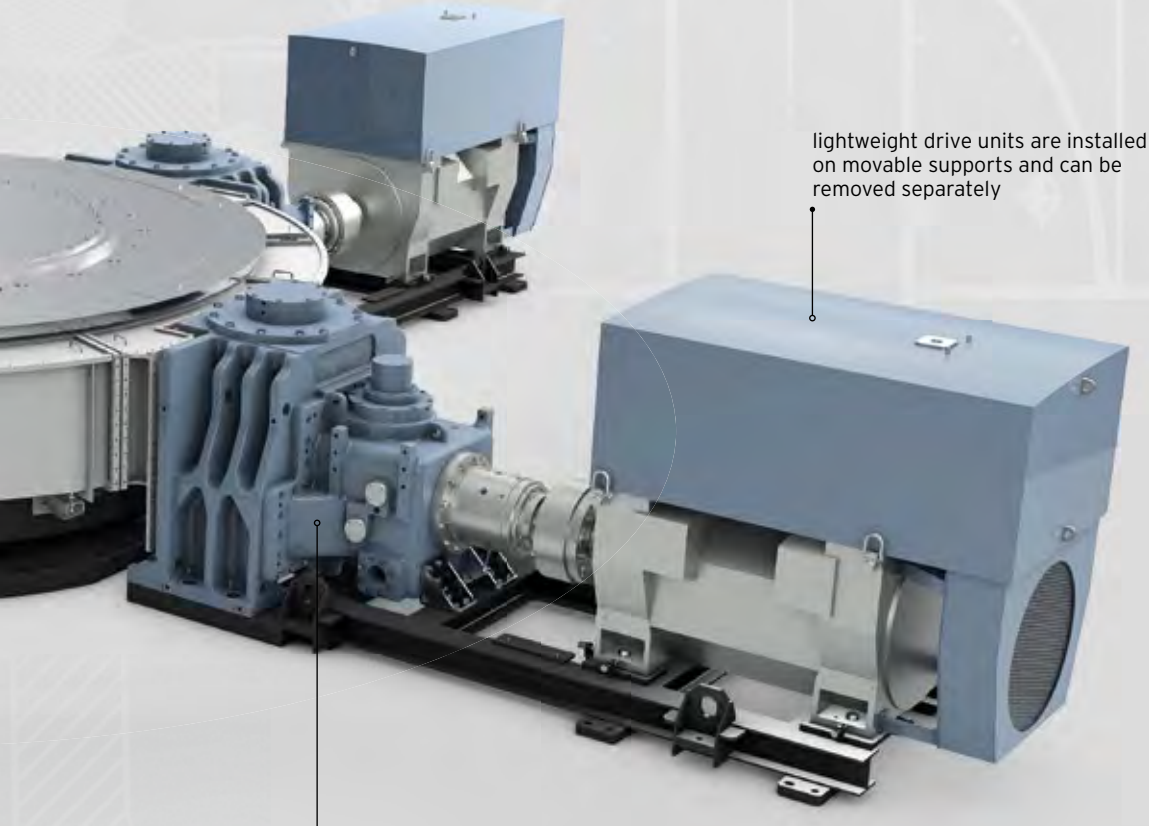
lightweight drive units are installed on movable supports and can be removed separately
gearbox comprising only standard components

Your advantages at a glance:

» **Individual drive design**
Depending on how much power you need, you may choose the suitable MultiDrive® with 3 to 6 identical drive units reaching a power rating of as much as 18,000 kW.

» **Reduced space and costs**
The MultiDrive® has the lowest construction height of all mill drive concepts available on the market. Your benefit: the MVR grinding plant is more compact and cost-efficient than any other system.

» **Flexibility thanks to variable grinding speed**
When grinding different materials with highly varying grindabilities and target fineness degrees, the system can be run with a frequency converter for speed variation. If you do not need such frequency converter right from the beginning, you may retrofit it anytime to adapt to changing requirements.

» **Ease of maintenance**
Radially arranged on movable supports, the drive units can be withdrawn easily from the mill. Moreover, with a maximum 25 t per drive unit, the MultiDrive® has a much lower weight than a conventional gearbox and is a lot easier to maintain.

» **Efficient stock-keeping**
Owing to the modular and lightweight design, using only standard components, stock-keeping becomes easier and less expensive. There is an additional benefit: one drive unit can be used for several mills with MultiDrive®.

» **Optimum return on investment**
There is no other mill drive concept ensuring such minimum downtimes and hence minimum production loss. Even if unplanned shutdowns occur, the Pfeiffer one-mill solution with the MVR mill, where production can be continued, is always better on the long run in terms of ROI as compared to a two-mill solution.

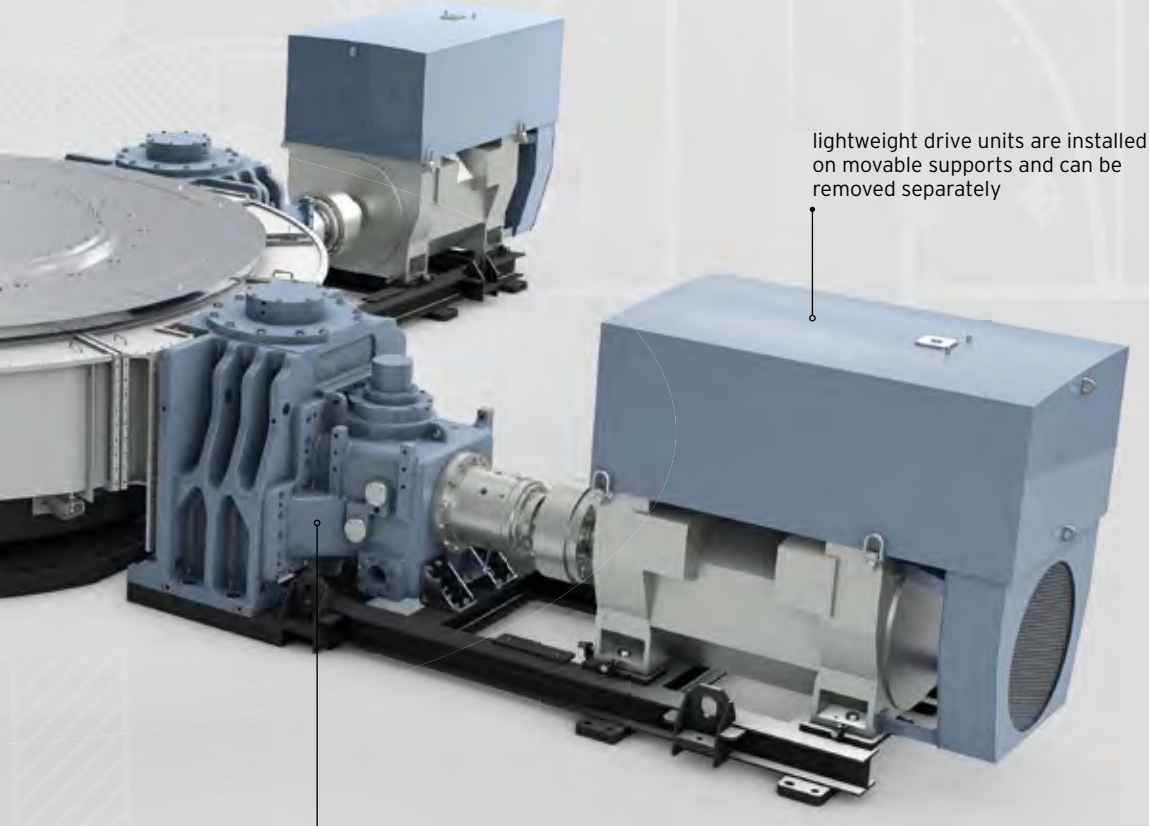
lightweight drive units are installed on movable supports and can be removed separately
gearbox comprising only standard components

MultiDrive® concept for elimination of weak spots

// Highest availability due to minor wear: when designing the MultiDrive®, we aimed at avoiding the weak spots of conventional single planetary gearboxes that cause long downtimes and work-intensive repair. With these conventional drives, the gearbox serves to transmit the motor couple to the grinding table. Moreover, it directs the grinding forces into the mill foundation. These two functions are completely separate on the MultiDrive®: under the mill there are no gearbox components which would be exposed to the grinding forces. Instead there is the so-called table thrust bearing with a number of thrust bearings and a flanged girth gear. Your benefit: no load from grinding forces, hence wear is reduced considerably.

Main damages occurring on conventional planetary gearboxes

Drive arranged under the grinding bowl: the grinding forces are directed through the gearbox into the foundation, thus straining the gearbox geometry.

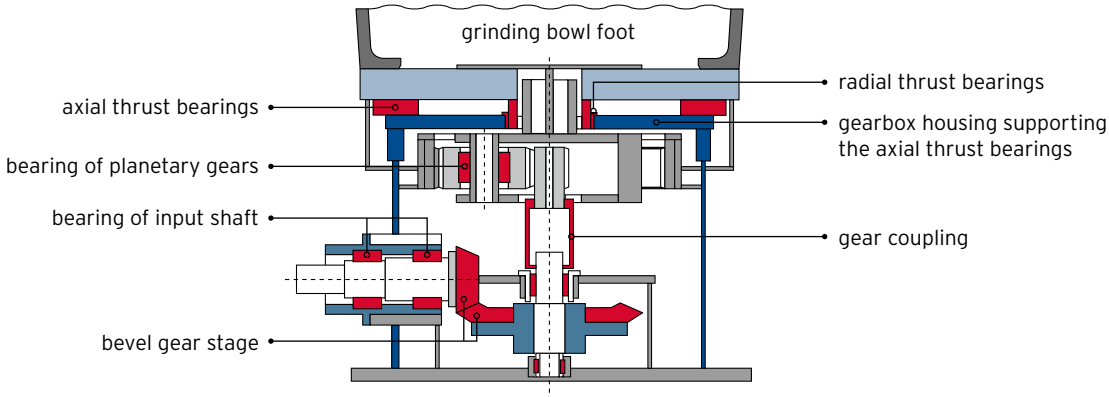

No weak spots with the MultiDrive®

Decentralized arrangement of drive: the grinding forces are directed through the rugged table thrust bearing into the foundation without straining the gearbox geometry.

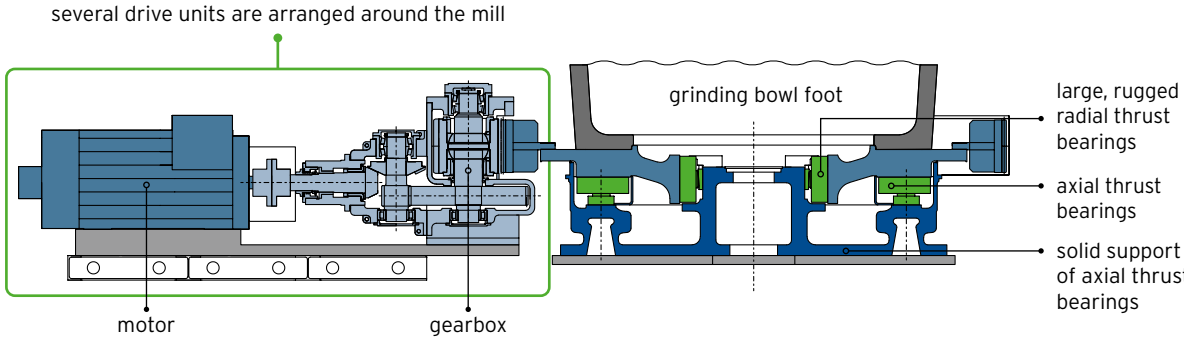

2

Unrivalled ease of maintenance without downtime

// To ensure utmost performance, even the best mill needs regular maintenance. This can be carried out with almost no production loss because we combined the Pfeiffer MVR mill with the unique MultiDrive®.

In fact, the mill will be operational again as soon as one or several rollers have been swung out or one or several drive units have been removed. This is what we call unrivalled ease of maintenance.

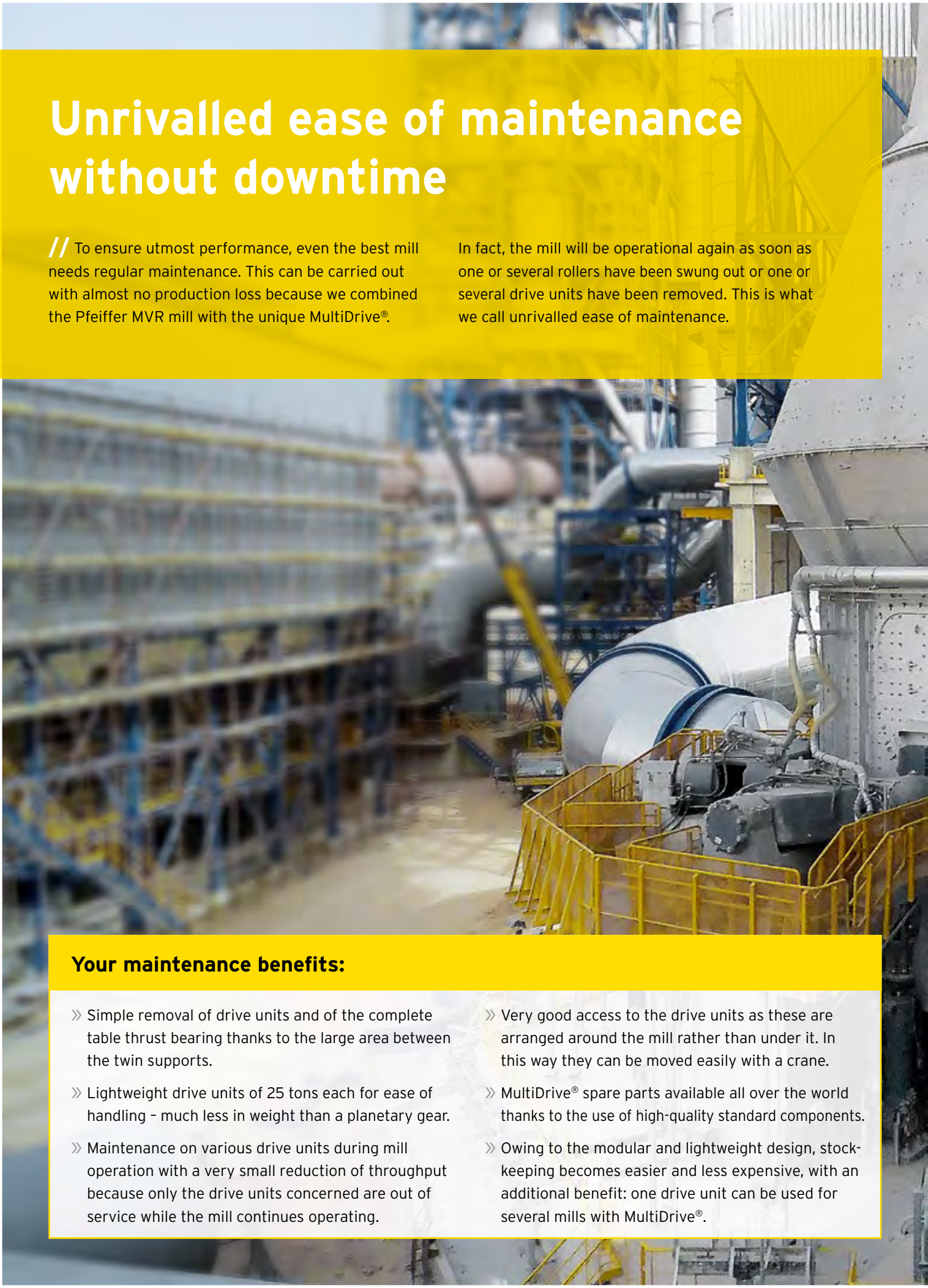

Your maintenance benefits:

- Simple removal of drive units and of the complete table thrust bearing thanks to the large area between the twin supports.
- Lightweight drive units of 25 tons each for ease of handling – much less in weight than a planetary gear.
- Maintenance on various drive units during mill operation with a very small reduction of throughput because only the drive units concerned are out of service while the mill continues operating.
- Very good access to the drive units as these are arranged around the mill rather than under it. In this way they can be moved easily with a crane.
- MultiDrive® spare parts available all over the world thanks to the use of high-quality standard components.
- Owing to the modular and lightweight design, stock-keeping becomes easier and less expensive, with an additional benefit: one drive unit can be used for several mills with MultiDrive®.

Saving costs when planning the overall plant

// What you are looking for is highest throughput at lowest cost. Thanks to the high power rating and active redundancy of grinding rollers and drive units, the Pfeiffer MVR mill with MultiDrive® is ideally suited for implementing an economical one-mill solution. In contrast to a conventional plant solution with two mills, the building volume and thus overall costs can be reduced considerably. Nonetheless, one single MVR mill equals the throughput rate of two mills, not to forget its outstanding record of availability. Moreover, the construction height of the MultiDrive® is the lowest worldwide. Thus VRM plants can be arranged even more compactly with additional cost benefits: excellent economy - second to none!

Comparison of construction heights

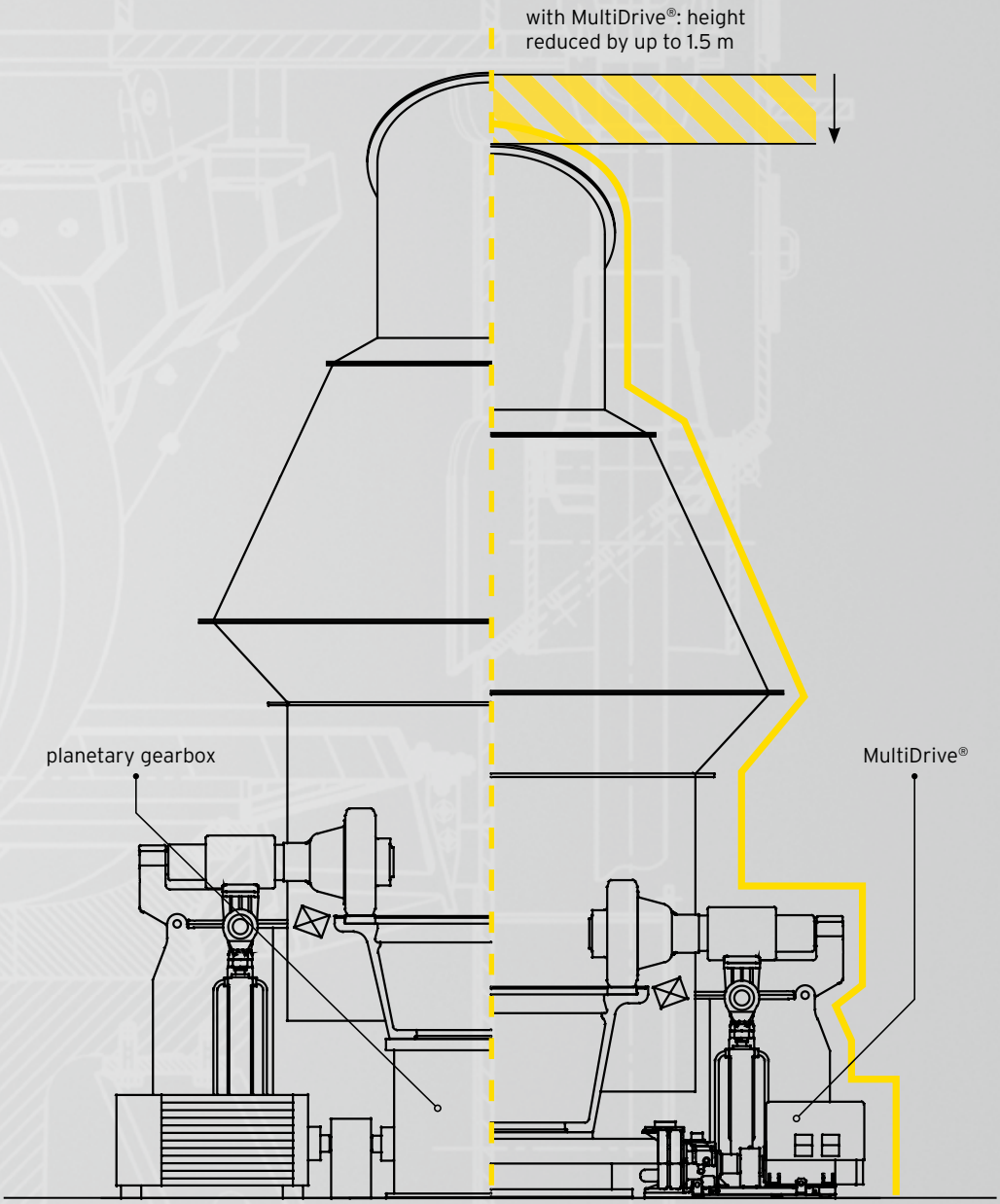

Lowest possible construction height – low cost

- Lowest mill gearbox worldwide
- Reduction of building volume
- Ease of installation and maintenance
- Lower center of gravity enhancing smooth run and reducing permanent stress
- Extremely compact design of grinding plant

A decision for the future

// Optimum return on investment (ROI)
As compared with the two-mill solution, the Pfeiffer one-mill solution with the MVR mill has a much better ROI. In fact, there is no other mill drive concept reducing unplanned downtime to a minimum. And even if unplanned shutdowns occur, the Pfeiffer one-mill solution is always better on the long run in terms of ROI because it achieves the same throughput as can normally be reached with two mills.

// Reduction of total cost of operation (TCO)
Our mills have long lifetimes. Hence, what we bear in mind while planning your plant, is saving cost on the long term with an economically compact design, low requirement for maintenance and repair, energy-optimized operation, overall active redundancy for grinding rollers, mill drives and mill motors, first-class quality of all components and their worldwide availability plus our renowned Pfeiffer service throughout the lifetime of your mill.

Cement grinding plant on EPC basis

Reduction of capital expenditure by implementing a one-mill solution with MultiDrive® as compared to a two-mill solution with conventional drives

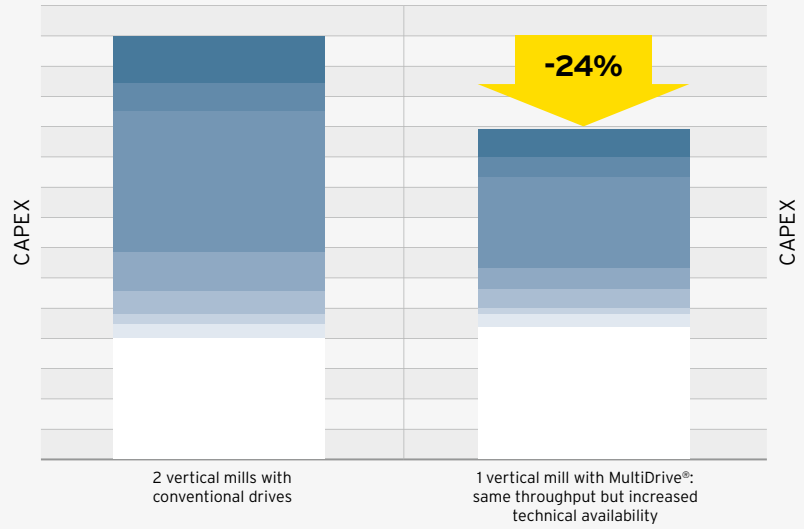

For this comparison, the following cost items were considered:

- Vertical roller mill(s)
- Mill gearbox(es)
- Mill motor(s) + frequency converter(s)
- Local manufacture of VRM parts
- Foundation for VRM
- Foundations for plant filter and plant fan
- Transportation DDP
- Initial oil filling
- Installation and commissioning
- Technical plant equipment
- Civil engineering
- Electrics and cabling
- Ductwork
- Insulation
- Fire protection

The economical alternative to the two-mill solution

Thanks to its unique features - high throughput rates combined with double active redundancy - the revolutionary Pfeiffer MVR vertical mill with MultiDrive® allows the implementation of the economical one-mill solution where two mills had to be installed before. Ask our experts!

One-mill solution as compared to two-mill solution

Payback period of investment / Cash flow – Cement grinding case study without any unplanned downtime

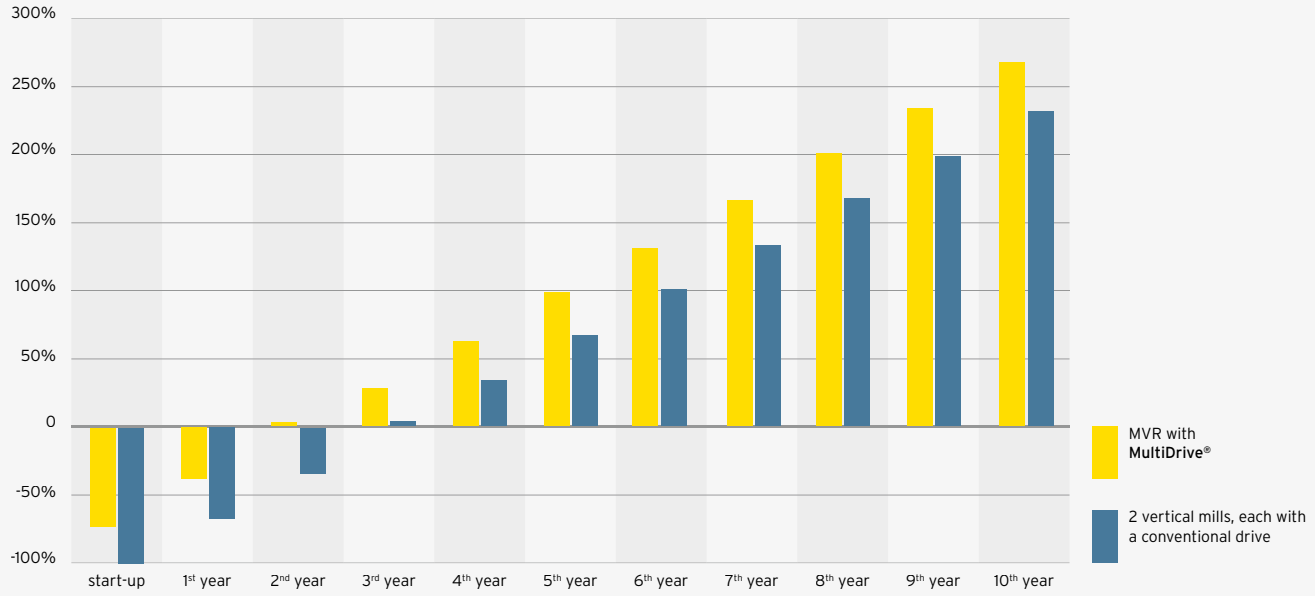

One-mill solution as compared to two-mill solution

Payback period of investment / Cash flow – Cement grinding case study with one gearbox failure per year causing a 30-day downtime

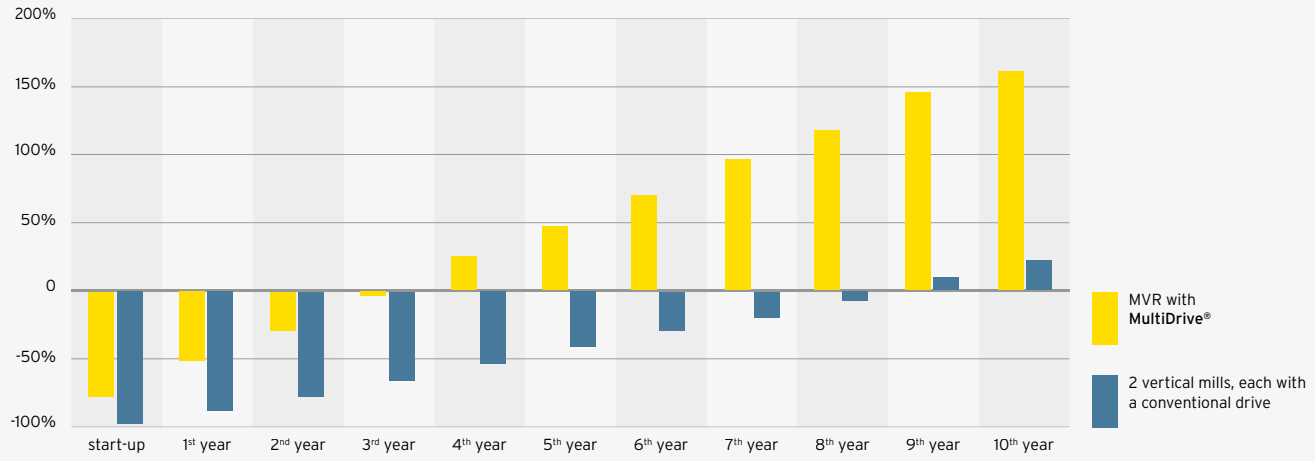

Unplanned production loss (Case study: throughput 300 t/h, cement price 60 US$/t)

Failure of one roller, one gearbox and one motor

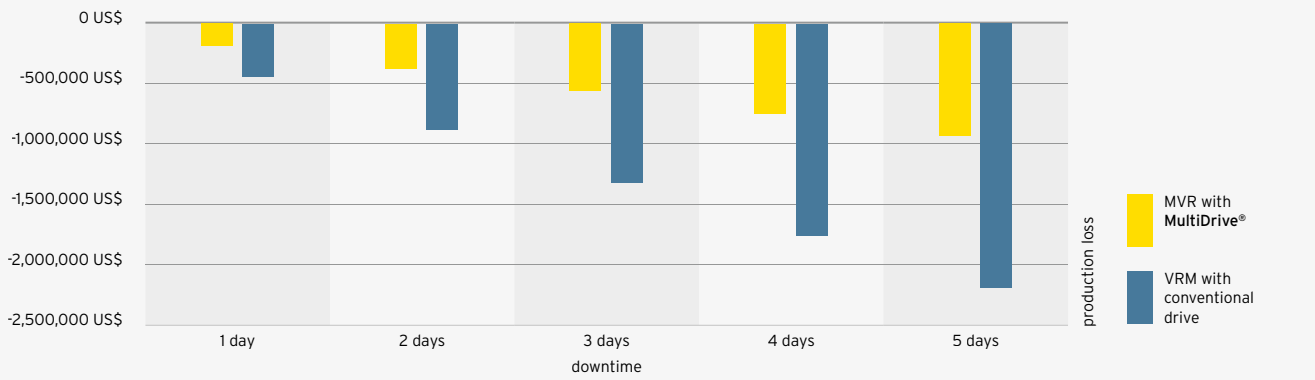

Cement grinding in Australia - **MVR 6000 C-6** with MultiDrive®

Cement grinding in Brazil - **MVR 6700 C-6** with **MultiDrive®**

Cement grinding in Algeria - **MVR 6700 C-6** with **MultiDrive®**

Cement grinding in India - **MVR 5600 C-4** with **MultiDrive®**

Pfeiffer service: available worldwide

// With Pfeiffer, you profit from a worldwide network of subsidiaries and experienced service partners who speak your language and will be on site rapidly. Our service team comprises skilled experts who are dedicated to using their knowledge and expertise for the sake of your productivity. No matter where your production site is: **we will be there.**

Please call whenever you need us

+49 631 4161 888

Pfeiffer Service Hotline

service@gebr-pfeiffer.com
spareparts@gebr-pfeiffer.com

www.gebr-pfeiffer.com

Head Office
Gebr. Pfeiffer SE
Germany
Service Point
Gebr. Pfeiffer
Grinding Technology
China
Service Point
Gebr. Pfeiffer Egypt LLC
Egypt
Service Point
Gebr. Pfeiffer India
India
Service Point
Vu Minh Co., Ltd
Vietnam
Service Point
Gebr. Pfeiffer
South East Asia
Malaysia
Service Point
ABOKKER Trading
Ethiopia
Service Point
BME Packaging
South Africa
Subsidiary/
Service Point
Service Point

GEBR. PFEIFFER

152.10.1.EN

Gebr. Pfeiffer SE
Barbarossastr. 50-54
67655 Kaiserslautern, Germany
Tel.: +49 631 4161 0
Fax: +49 631 4161 290
info@gebr-pfeiffer.com

Gebr. Pfeiffer USA
Tel.: +1 954 668 2008
info@gebrpfeifferinc.com

Gebr. Pfeiffer India
Tel.: +91 120 618 8900
info@pfeifferindia.com

Gebr. Pfeiffer China
Tel.: +86 10 65 907 006
info@pfeiffer-china.com

Gebr. Pfeiffer Brasil
Tel.: +55 11 3255 2681
brasil@gebr-pfeiffer.com

Gebr. Pfeiffer Egypt
Tel.: +20 103 333 9581
mena@gebr-pfeiffer.com

Gebr. Pfeiffer Malaysia
Tel.: +60 376 224 252
seasia@gebr-pfeiffer.com

Gebr. Pfeiffer Russia
Tel.: +7 495 136 65 98
cis@gebr-pfeiffer.com

www.gebr-pfeiffer.com